ACE 182 – Machines Theory

Lecture 1

Introduction to the Course

Dr. Ahmed Khalifa

Assistant Professor
Department of Industrial Electronics and Control Engineering
Faculty of Electronic Engineering
Menofia University

Spring 2017

Agenda

- **Rule of Theory of Machines**
- **Basic Definitions**
- **Course Description**
- **What is expected of you in this course?**

Agenda

- **Rule of Theory of Machines**
- Basic Definitions
- Course Description
- What is expected of you in this course?

Rule of Theory of Machines

- **The theory of Machines and Mechanisms provides the foundation for the study of displacements, velocities, accelerations, and static and dynamic forces, and balancing required for:**
  - **The proper design of mechanical linkages, and**
  - **Analysis and modification of existing mechanisms.**

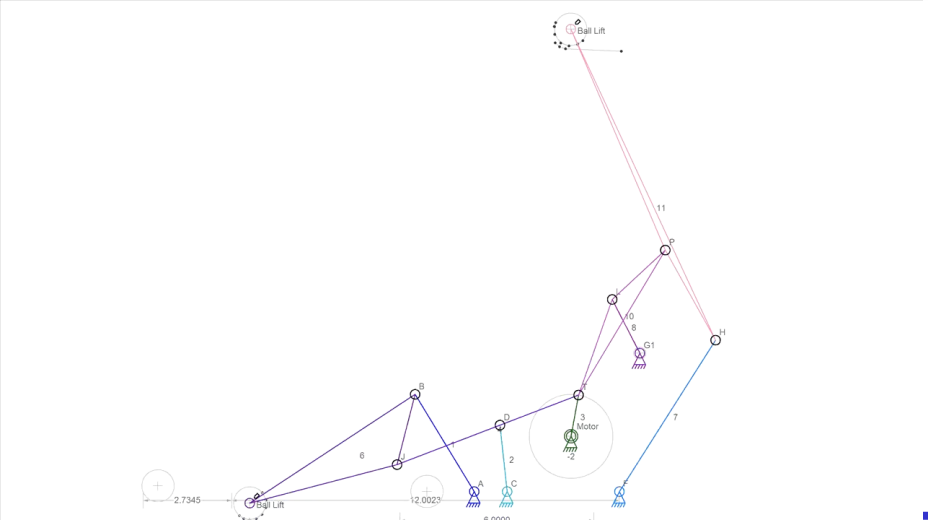

Rule of Theory of Machines

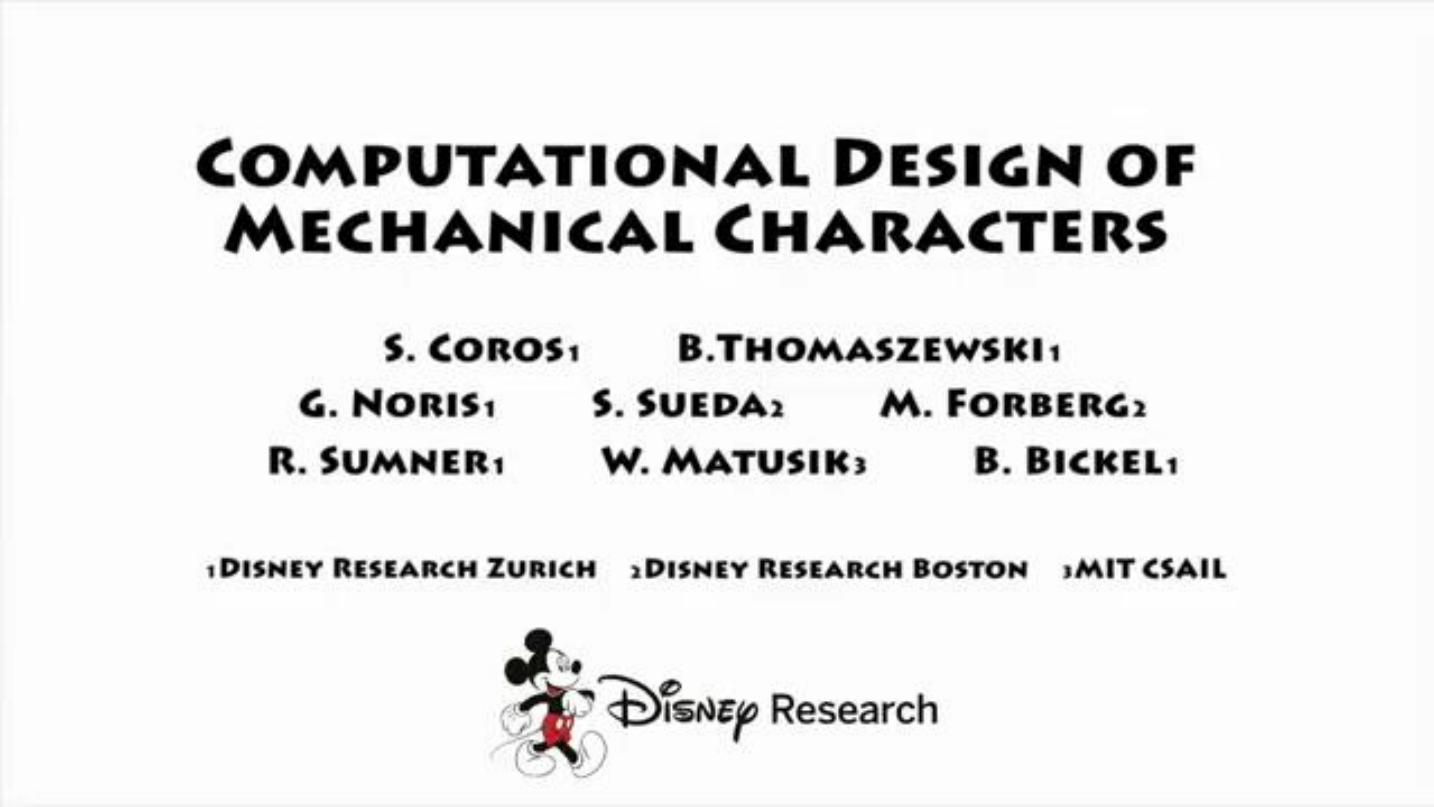

Rule of Theory of Machines

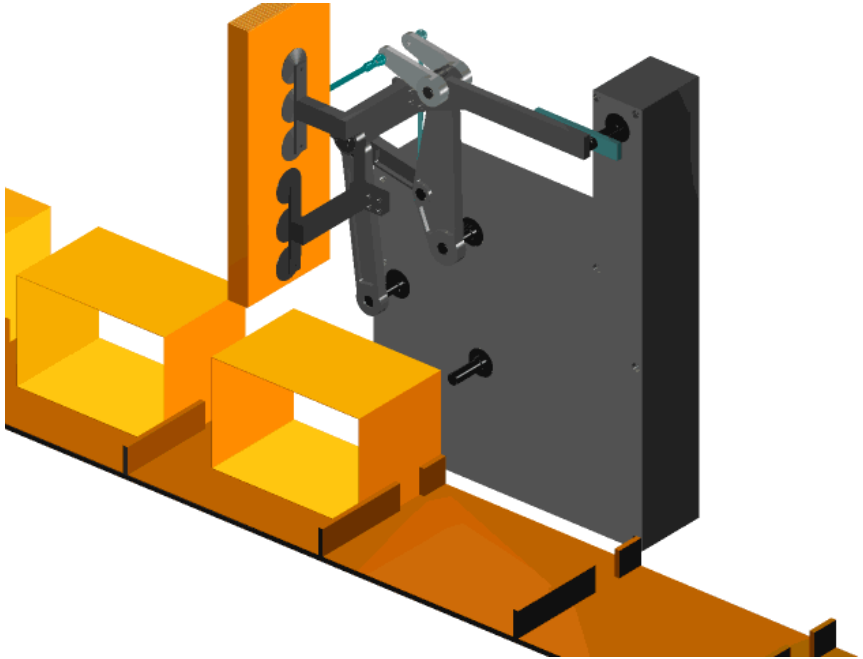

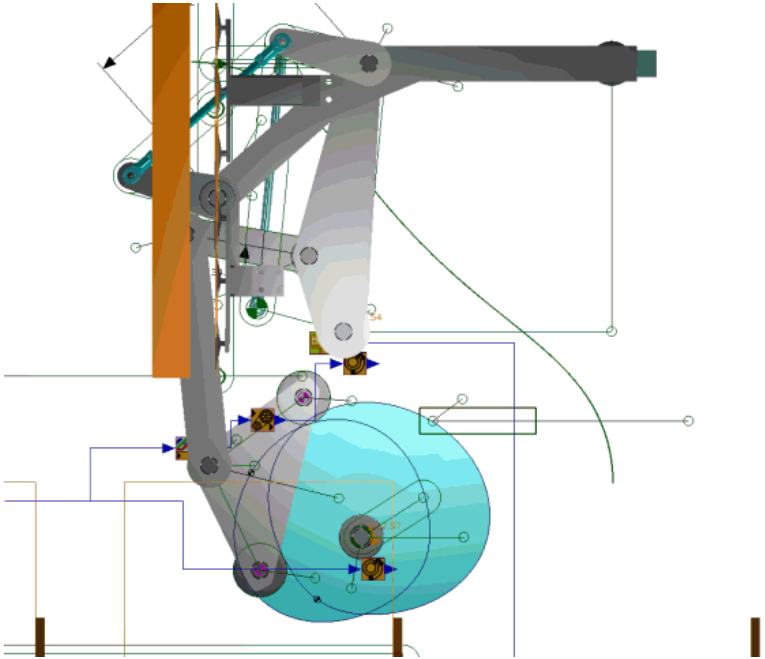

Rule of Theory of Machines

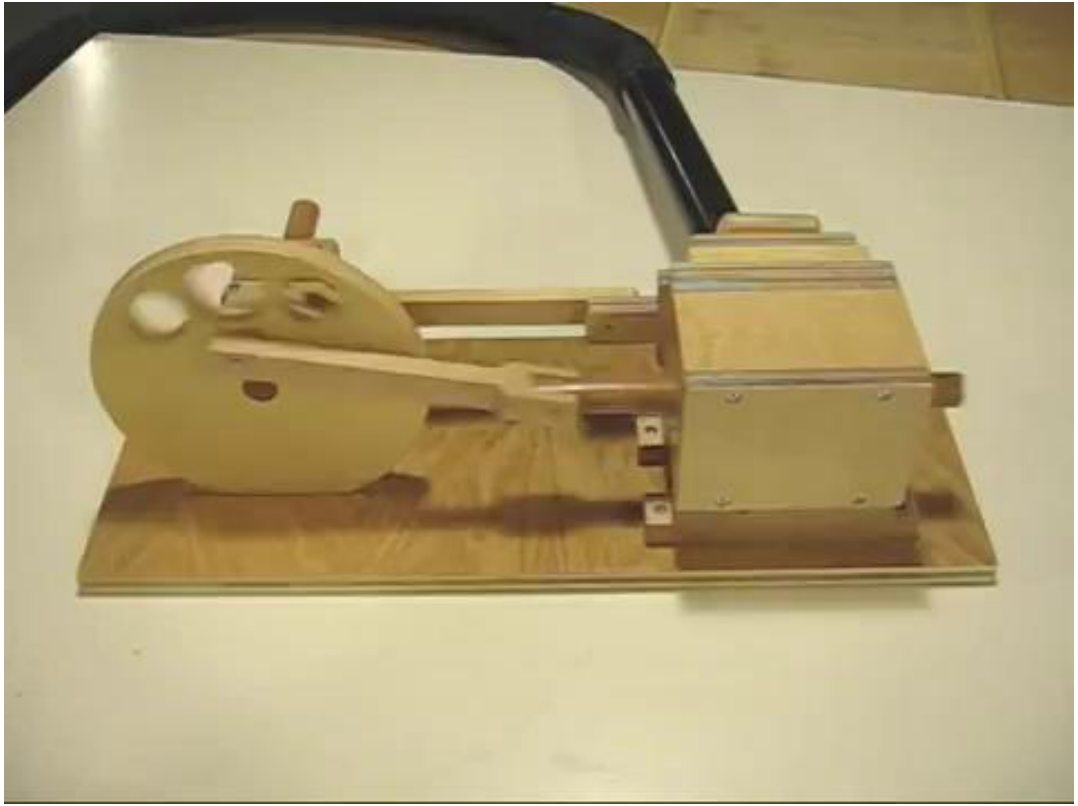

Rule of Theory of Machines

Rule of Theory of Machines

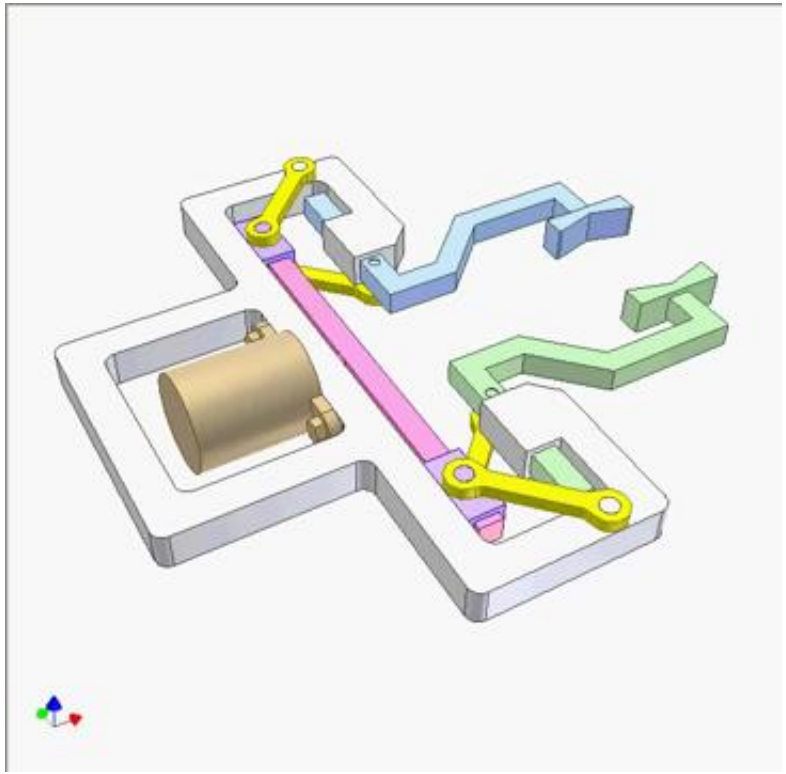

Rule of Theory of Machines

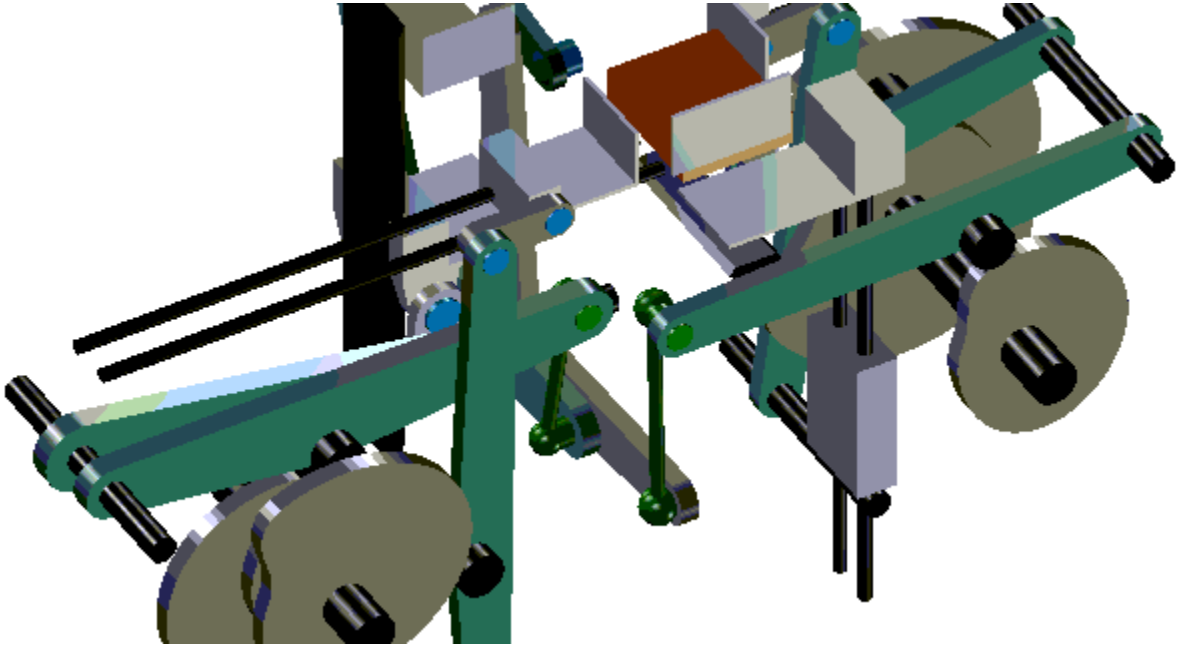

Rule of Theory of Machines

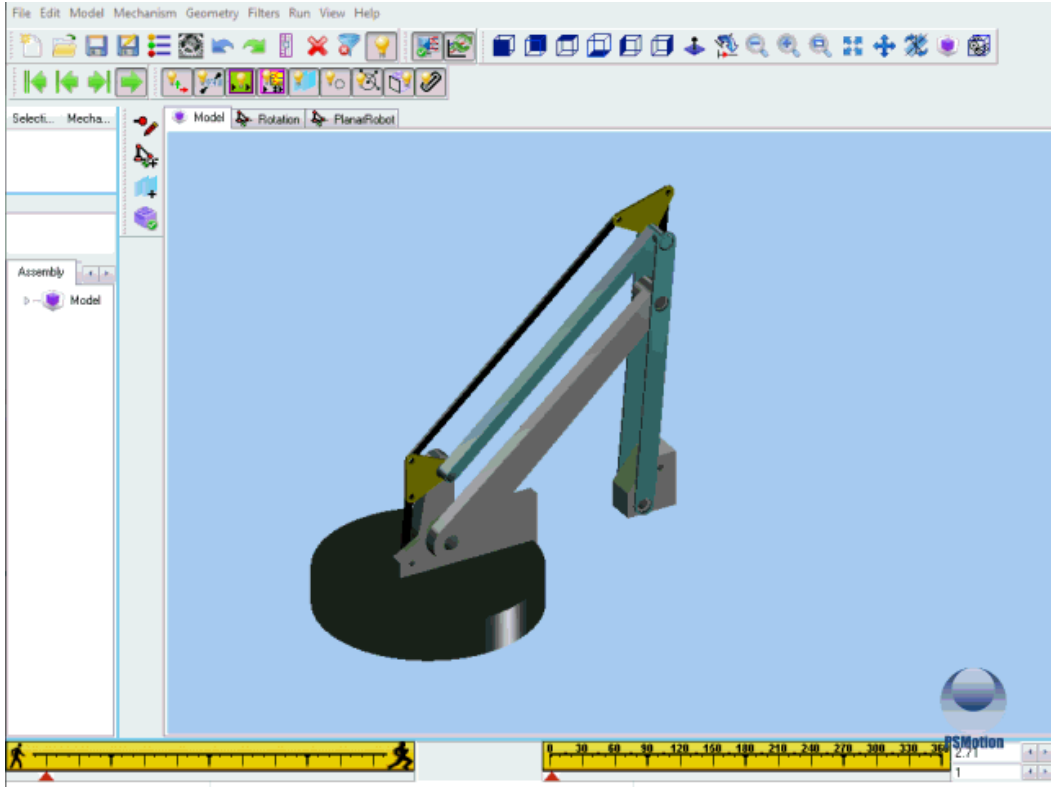

Agenda

- Rule of Theory of Machines
- **Basic Definitions**
- Course Description
- What is expected of you in this course?

Definitions

- **Force:**
  - **An agent or influence that, if applied to a free body results chiefly in an acceleration of the body and sometimes in elastic deformation and other effects.**
  - **Every day we deal with forces of one kind or another. A pressure is a force. The earth exerts a force of attraction for all bodies or objects on its surface.**

- **Torque:**
  - **Something that produces or tends to produce rotation and whose effectiveness is measured by the product of the force and the perpendicular distance from the line of action of the force to the axis of rotation.**
  - **F x l_2 is the torque of F about fixed point A**

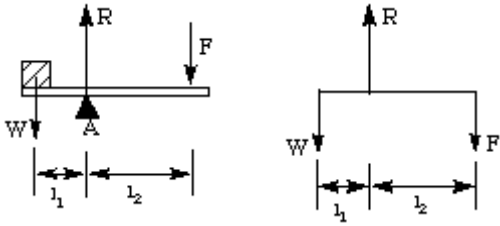

Definitions

- **Motion:**
  - **A change of position or orientation.**
  - **Linear: Position – Velocity – Acceleration - Force**
  - **Angular: orientation – Angular velocity – Angular acceleration - Torque**

- **Rigid Body:**
  - **is that body whose changes in shape are negligible compared with its overall dimensions or with the changes in position of the body as a whole.**

- **Absolute motion:**
  - **the motion of body in relative to another body which is at rest or to a fixed point located on this body.**

- **Relative motion:**
  - **the motion of body in relative to another moved body.**

Definitions

- **Theory of Machines**
  - **The subject Theory of Machines may be defined as that branch of Engineering-science, which deals with the study of relative motion between the various parts of a machine, and forces which act on them.**
  - **The knowledge of this subject is very essential for an engineer in designing the various parts of a machine.**
  - **Theory of Machines may be sub- divided into the following four branches:**

- **Kinematics:**
  - **is that branch of theory of machines which is responsible to study the motion of bodies without reference to the forces which are cause this motion, i.e it's relate the motion variables (displacement, velocity , acceleration) with the time.**

- **Kinetics:**
  - **is that branch of theory of machines which is responsible to relate the action of forces on bodies to their resulting motion.**

Definitions

- **Theory of Machines**
  - **The subject Theory of Machines may be defined as that branch of Engineering-science, which deals with the study of relative motion between the various parts of a machine, and forces which act on them.**
  - **The knowledge of this subject is very essential for an engineer in designing the various parts of a machine.**
  - **Theory of Machines may be sub- divided into the following four branches:**

- **Dynamics:**
  - **is that branch of theory of machines which deals with the forces and their effects, while acting upon the machine parts in motion.**

- **Statics:**
  - **is that branch of theory of machines which deals with the forces and their effects, while the machine parts are rest.**

Definitions

- **Link:**
  - **is defined as a rigid body having two or more pairing elements, which connect it to other bodies for the purpose of transmitting force or motion. It is assumed to be rigid bodies**
  - **In every machine, at least one link either occupies a fixed position relative to the earth or carries the machine as a whole along with it during motion. This link is the frame of the machine and is called the fixed link.**

- **Joint:**
  - **is defined as a connection between two links that is formed through direct contact between them.**

- **Kinematic chain:**
  - **Assemblage of links and joints, interconnected in a way to provide a controlled output motion in response to a supplied input motion. The combination of links and pairs without a fixed link.**

Definitions

- **Mechanism**
  - **A kinematic chain in which at least one link has been grounded or attached to the frame of reference.**
  - **is a combination of rigid bodies which are formed and connected together by some means, so that they are moved to perform some functions, such as the steering mechanisms of automobiles.**
  - **is a device that transforms motion to some desirable pattern and typically develops very low forces and transmits little power. Examples: pencil sharpener- a camera shutter - an analog clock - a folding chair - umbrella**
- **Machine**
  - **typically contains mechanisms that are designed to provide significant forces and transmit significant power.**
  - **Examples: food blender - a bank vault door - an automobile transmission - a bulldozer - a robot.**
- **Machinery**
  - **generally means machines and mechanisms**

Definitions

- **Structure:**
  - **It is an assemblage of a number of resistant bodies (known as members) having no relative motion between them and meant for carrying loads having straining action. A railway bridge, a roof truss, machine frames etc., are the examples of a structure.**
- **Design**
  - **The creation of something that did not exist before**
- **Synthesis**
  - **To create a mechanism to give a certain motion.**
- **Analysis**
  - **To determine the motion characteristics of a given mechanism.**

Agenda

- Rule of Theory of Machines
- Basic Definitions
- **Course Description**
- What is expected of you in this course?

Course Objectives (ILO's)

Upon successful completion of the course, the student will be able:

- **Identify mechanisms** and **predict their motion**
- Calculate the **degrees of freedom** of mechanisms
- Determine the **positions**, **velocities** and **accelerations** of links and points on mechanisms
- Calculate dynamic **joint forces** of mechanisms
- **Balance** simple rotating objects
- Analyze and modify existing mechanisms
- **Synthesize**, analyze, and simulate a mechanism in a **computer aided software**
- **Work cooperatively on teams**
- Prepare and present **technical reports**

Course Topics

- **Introduction to the Course**
- **Kinematics Fundamentals**
- **Graphical Linkage Synthesis**
- **Position Analysis**
- **Velocity Analysis**
- **Acceleration Analysis**
- **Dynamics Fundamentals**
- **Dynamic Force Analysis**
- **Balancing**

Assessment

Weight	Evaluation Method
40%	**Final** (you must score at least **50% in final to pass**)
20%	**Midterms** (2 x 10% midterms, **all counted**)
10%	**Pop quizzes** (5 to 10 randomly distributed – **all counted**)
30%	**Project** (Include 2 x 5% follow up reports)

Course Project

Topics

- **The topics should include the synthesis, analysis, simulation of a mechanism.**

Course Project

Teams

- **To register in a project, the team must submit a file with the following items to your course instructor's email address before the 5th weak:**
  - **Names of team members, IDs, email address.**
  - **Project title**
  - **Project introduction (motivation and objective)**

Course Policy

- **Late Submission Policy:**
  - **Anything submitted after 11:59PM on the due date will be penalized by 50% for each 24 hours of lateness.**
- **Absence Policy:**
  - **Attendance in all academic activities is mandatory.**
  - **Students who are absent more than 25% of the time in the course should not be permitted to attend the final examination and should receive a W grade.**
- **No makeup exams should be offered for missed exams.**
- **Projects and all other assignments will be submitted in electronic format.**
- **No homework need to be submitted, they are just for personal practice and solutions will be provided to you.**

Course Resources

- **Course Website:** **Slack Page: https://fee-ace182-spring17.slack.com**
- **Course material - Course announcements – Discussions - etc. . .**
  - **Desktop/Mobile app: https://fee-ace182-spring17.slack.com/downloads/windows**
- **Textbook:**
  - **R. L. Norton, Design of Machinery "An Introduction to the Synthesis and Analysis of Mechanisms and Machines", 3rd edition**
- **Course Instructor**
  - **Dr. Ahmed Khalifa**
  - **Email: ahmed.khalifa0687@gmail.com**
  - **Office:** Control Building - Ground floor
  - **Office hours:** 2 hrs. after lecture

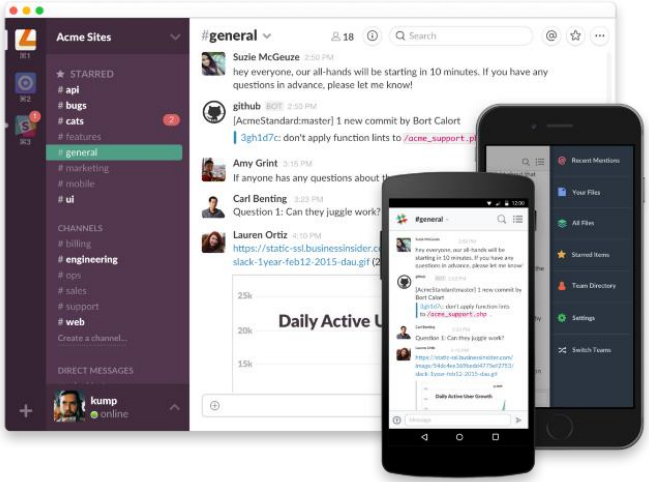

Agenda

- Rule of Theory of Machines
- Basic Definitions
- Course Description
- **What is expected of you in this course?**

What is expected of you in this course?

- Download all handouts from the specified internet site and check it frequently.
- Attend all lectures.
- Read the assigned portions of the book (The lectures are not a substitute for reading the book).
- Do all homework on time.
- Do all projects and submit them in a standard form.
- You really must start the projects when assigned - you cannot throw them together at the last minute and have a good result!
- ALL your work must be your own or your group's.

What is expected of you in this course?

- **You are expected to approach this course with the philosophy of education in mind, as described in the undergraduate catalog, "...The educated people should be able to cope with change, to learn by themselves, to think for themselves, to analyze and deal with problems in a confident and realistic manner."**

- **Theory of Machines is a very broad and interesting subject, and a moderately difficult one.**
- **It is not possible to cover all of its varied aspects in the lectures.**
- **Therefore, the readings, quizzes, and projects may deal with topics NOT specifically covered in class lectures.**
- **Nevertheless, you are expected, in the spirit of the education philosophy, to extend yourself, learn on your own, and rise to the challenges of the course objectives.**

Lecture End

Questions?

ahmed.khalifa0687@gmail.com

ahmed.khalifa@el-eng.menofia.edu.eg